HALFEN Pipe clamps are well suited for fittings in combination with HALFEN Framing Systems. Due to the material thickness of HALFEN Pipe clamps which are dimensioned by relating requirements, an optimum of material efficiency is guaranteed.

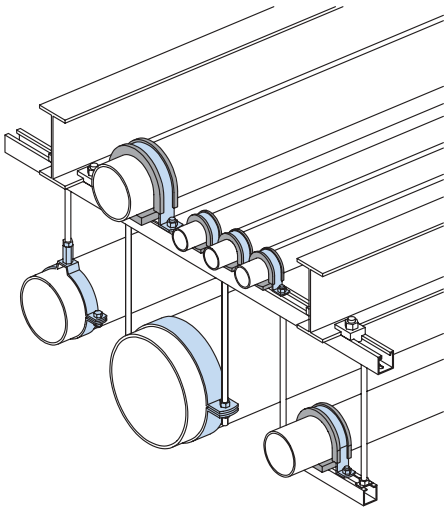

e.g. **HCS - RAD - 160 - fv** → page 81

HALFEN Pipe clamps are available in a whole range of versions for pipe - Ø from 15 to 530 mm.
For Alpha pipe fittings, HALFEN also offers pipe clamp, sound attenuation insulation and pipe rest as a complete assembly set (Type HCS - RAD) → page 81

Using HALFEN Pipe fittings, spatial adjustment in all directions at any time is assured.

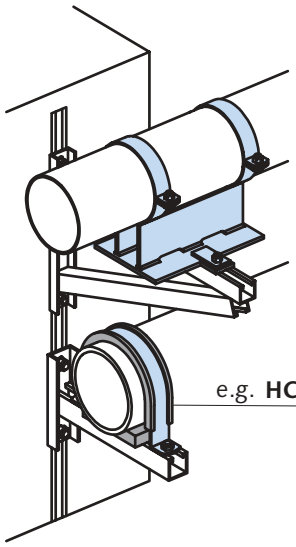

In case of loads in longitudinal direction of pipe use cantilevers with lateral bracing,
e.g. b KON-Z1,
→ page 76

e.g. **HCS - RAD - 125 - A4**
→ page 81

**Assembly diagram:**
Example: HALFEN Pipe clamp **HRS - A** on
HALFEN Cantilever **KON - 52/2** (→ Assembly set HCS - RAD, page 81).

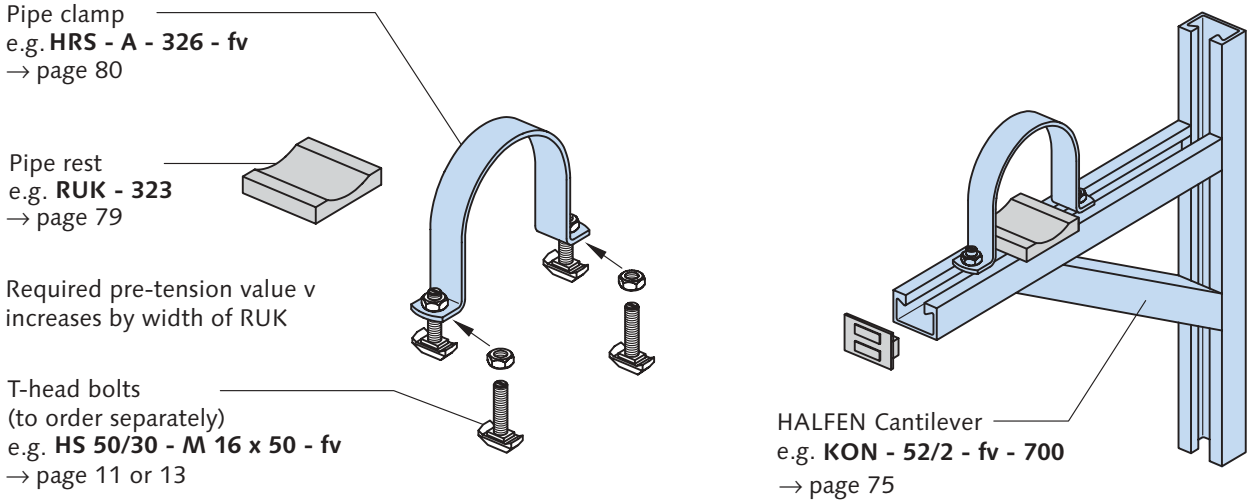

## RUK

Pipe rest for pipe clamp Type Alpha
(→ pages 80 - 81),
Material: polypropylene,
resistant to temp. from -30 to +90° C
Colour: green

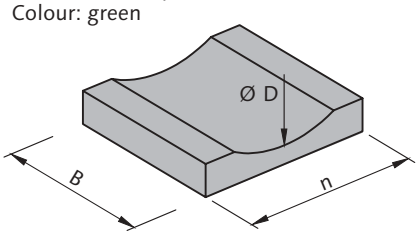


Assembly example:

- Pipe rest **RUK**
- Pipe clamp **HRS - A**
- Cantilever **KON 41/2**

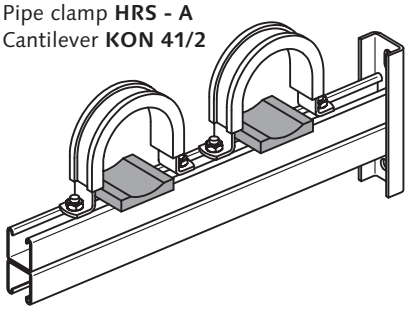

| Designation | Stock no. 0316.000- | | Dimensions [mm] for Ø D D [mm] | n | B | d2 |
|---|---|---|---|---|---|---|
| **RUK - 57** | 00001 | ○ | 57 | 38 | 50 | 10 |
| **RUK - 60** | 00002 | ● | 60 | | | |
| **RUK - 76** | 00003 | ● | 76 | | | |
| **RUK - 88** | 00004 | ● | 88 | 75 | 70 | 15 |
| **RUK - 108** | 00005 | ● | 108 | | | |
| **RUK - 114** | 00006 | ● | 114 | | | |
| **RUK - 133** | 00007 | ○ | 133 | | | |
| **RUK - 139** | 00008 | ● | 139 | | | |
| **RUK - 159** | 00009 | ● | 159 | 140 | 75 | 25 |
| **RUK - 168** | 00010 | ● | 168 | | | |
| **RUK - 193** | 00011 | ● | 193 | | | |
| **RUK - 216** | 00012 | ● | 216 | | | |
| **RUK - 219** | 00013 | ● | 219 | | | |
| **RUK - 267** | 00014 | ○ | 267 | | | |
| **RUK - 273** | 00015 | ● | 273 | | | |
| **RUK - 318** | 00016 | ● | 318 | 220 | 75 | 30 |
| **RUK - 323** | 00017 | ● | 323 | | | |
| **RUK - 355** | 00018 | ● | 355 | | | |
| **RUK - 368** | 00019 | ○ | 368 | | | |
| **RUK - 406** | 00020 | ● | 406 | | | |
| **RUK - 419** | 00021 | ● | 419 | | | |
| **RUK - 508** | 00022 | ● | 508 | | | |
| **RUK - 521** | 00023 | ○ | 521 | | | |

Notes for assembly of RUK

Pipe rest RUK
d2 = Ø of knobs

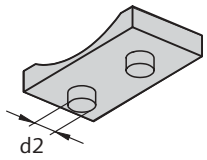


Channel slot
width > d2

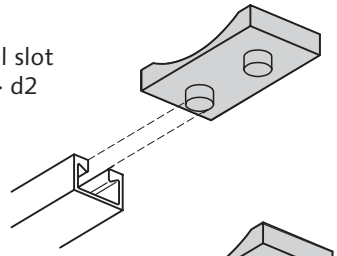

Channel slot
width < d2

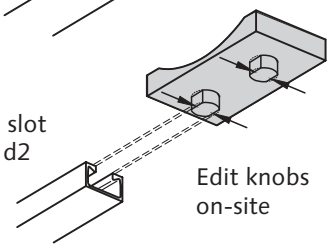

Edit knobs
on-site

## RUV

Pipe rest for various pipe - Ø.
Cost efficient alternative as **RUV** is suitable for a number of pipe sizes. Pipe rest made of plastic (Two-point-rest).

Material: polypropylene, restistant to temperatures from -30 to +90°
Colour: black

| Designation | Stock no. 0317.000- | | for Ø D [mm] | L [mm] | B [mm] | N [mm] | H [mm] |
|---|---|---|---|---|---|---|---|
| **RUV - K** | 00001 | ● | 25 - 79 | 30 | 50 | 11 | 11 |
| **RUV - M** | 00002 | ● | 80 - 269 | 80 | 70 | 17 | 15 |
| **RUV - G** | 00003 | ● | 270 - 420 | 120 | 70 | 17 | 16 |

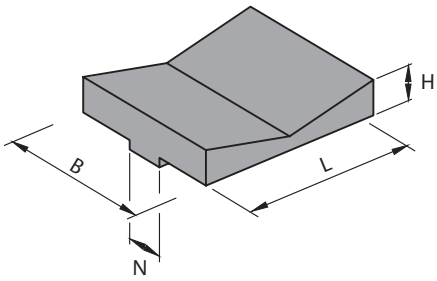


Type **RUV - K** for HALFEN Channels: min. 12 mm slot width
max. 52 mm channel width

Type **RUV - M** for HALFEN Channels: min. 18 mm slot width
max. 72 mm channel width

Type **RUV - G** for HALFEN Channels: min. 18 mm slot width
max. 72 mm channel width

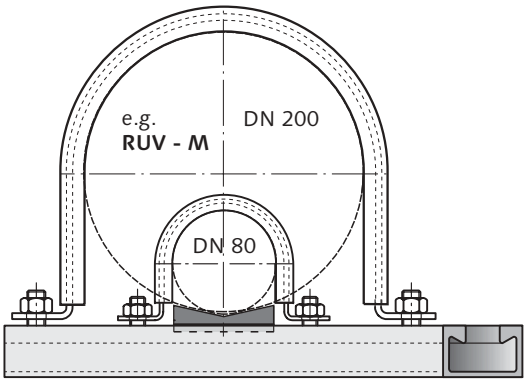


● Standard ○ to order

## HRS - A

Alpha Pipe clamp

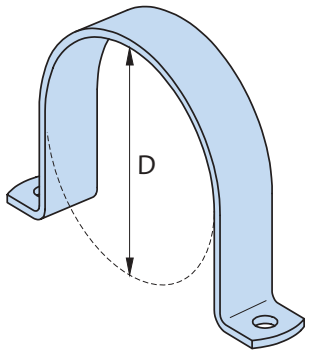


Assembly note:
Pre-assemble Alpha pipe clamps with T-head bolts, then apply to HALFEN Channel resp. cantilever and tighten screw.

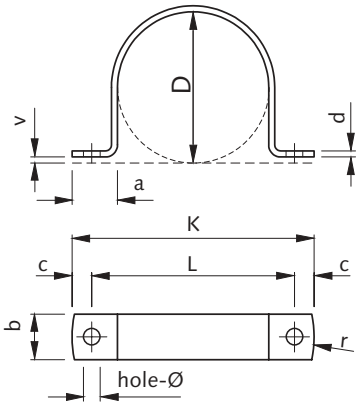


| Material fv h.d. galvanised Ø D [mm] | Stock no. 0311.010- | | Material A4 Stainl. steel A4 Ø D [mm] | Stock no. 0311.010- | | span width from - to [mm] | hole Ø [mm] | b/d [mm] | L [mm] | K [mm] | a [mm] | c [mm] | r [mm] | Pre-tension dim. v [mm] |
|---|---|---|---|---|---|---|---|---|---|---|---|---|---|---|
| **17** | 00048 | ● | **17** | 00001 | ● | 16 - 19 | 11 for M 10 | 25/2,5 | 51 | 77 | 30 | 13 | 19 | 2,75 |
| **21,5** | 00049 | ● | **21,5** | 00002 | ● | 20,5 - 23,5 | | | 55,5 | 81,5 | | | | |
| **27** | 00050 | ● | **27** | 00003 | ● | 26 - 29 | | | 61 | 87 | | | | |
| **33,5** | 00051 | ● | **33,5** | 00004 | ● | 32,5 - 35,5 | | | 67,5 | 93,5 | | | | |
| **42,5** | 00052 | ● | **42,5** | 00005 | ● | 41,5 - 44,5 | | | 76,5 | 102,5 | | | | |
| **48,5** | 00053 | ● | **48,5** | 00006 | ● | 47,5 - 50,5 | | | 82,5 | 108,5 | | | | |
| **50** | 00054 | ● | **50** | 00007 | ● | 49 - 52 | | | 84 | 110 | | | | |
| **56** | 00055 | ● | **56** | 00008 | ● | 55 - 58 | | | 90 | 116 | | | | |
| **60** | 00056 | ● | **60** | 00009 | ● | 59 - 62 | | | 94 | 120 | | | | |
| **64** | 00057 | ● | **64** | 00010 | ● | 63 - 66 | | | 98 | 124 | | | | |
| **77** | 00058 | ● | **77** | 00011 | ● | 76 - 79 | | | 111 | 137 | | | | |
| **80** | 00059 | ● | **80** | 00012 | ● | 79 - 82 | | | 114 | 140 | | | | |
| **84** | 00060 | ● | **84** | 00013 | ● | 83 - 86 | | | 118 | 144 | | | | |
| **89** | 00061 | ● | **89** | 00014 | ● | 88 - 91 | | | 123 | 149 | | | | |
| **96** | 00062 | ● | **96** | 00015 | ● | 95 - 98 | | | 130 | 156 | | | | |
| **100** | 00063 | ● | **100** | 00016 | ● | 98 - 102 | 11 for M 10 | 30/4 | 134 | 160 | 30 | 13 | 19 | 4 |
| **105** | 00064 | ● | **105** | 00017 | ● | 103 - 107 | | | 139 | 165 | | | | |
| **110** | 00065 | ● | **110** | 00018 | ● | 108 - 112 | | | 144 | 170 | | | | |
| **116** | 00066 | ● | **116** | 00019 | ● | 114 - 118 | | | 150 | 176 | | | | |
| **125** | 00067 | ● | **125** | 00020 | ● | 123 - 127 | | | 159 | 185 | | | | |
| **131** | 00068 | ● | **131** | 00021 | ● | 129 - 133 | | | 165 | 191 | | | | |
| **137** | 00069 | ● | **137** | 00022 | ● | 135 - 139 | | | 171 | 197 | | | | |
| **141** | 00070 | ● | **141** | 00023 | ● | 139 - 143 | | | 175 | 201 | | | | |
| **150** | 00071 | ● | **150** | 00024 | ● | 148 - 152 | | | 184 | 210 | | | | |
| **157** | 00072 | ● | **157** | 00025 | ● | 155 - 159 | | | 191 | 217 | | | | |
| **160** | 00073 | ● | **160** | 00026 | ● | 158 - 162 | 13 for M 12 | 40/4 | 208 | 240 | 40 | 16 | 19 | 4 |
| **168** | 00074 | ● | **168** | 00027 | ● | 166 - 170 | | | 216 | 248 | | | | |
| **176** | 00075 | ● | **176** | 00028 | ● | 174 - 178 | | | 224 | 256 | | | | |
| **185** | 00076 | ● | **185** | 00029 | ● | 183 - 187 | | | 233 | 265 | | | | |
| **200** | 00077 | ● | **200** | 00030 | ● | 198 - 202 | | | 248 | 280 | | | | |
| **212** | 00078 | ● | **212** | 00031 | ● | 210 - 214 | | | 260 | 292 | | | | |
| **218** | 00079 | ● | **218** | 00032 | ● | 216 - 220 | | | 266 | 298 | | | | |
| **225** | 00080 | ● | **225** | 00033 | ● | 223 - 227 | | | 273 | 305 | | | | |
| **235** | 00081 | ● | **235** | 00034 | ● | 233 - 237 | | | 283 | 315 | | | | |
| **267** | 00083 | ○ | **267** | 00035 | ○ | 265 - 269 | 17 for M 16 | 50/5 | 317 | 367 | 50 | 25 | 28 | 5 |
| **273** | 00084 | ○ | **273** | 00036 | ● | 271 - 275 | | | 323 | 373 | | | | |
| **285** | 00085 | ● | **285** | 00037 | ● | 283 - 287 | | | 335 | 385 | | | | |
| **326** | 00086 | ○ | **326** | 00038 | ● | 324 - 328 | | | 376 | 426 | | | | |
| **340** | 00087 | ○ | **340** | 00039 | ○ | 338 - 342 | | | 390 | 440 | | | | |
| **355** | 00088 | ○ | **355** | 00040 | ○ | 353 - 357 | 17 for M 16 | 50/5 | 405 | 455 | 50 | 25 | 28 | 5 |
| **400** | 00089 | ○ | **400** | 00041 | ○ | 398 - 402 | | | 450 | 500 | | | | |
| **406** | 00090 | ● | **406** | 00042 | ○ | 404 - 408 | | | 456 | 506 | | | | |
| **420** | 00091 | ○ | **420** | 00043 | ○ | 418 - 422 | | | 470 | 520 | | | | |
| **429** | 00092 | ○ | **429** | 00044 | ○ | 427 - 431 | | | 479 | 529 | | | | |
| **508** | 00093 | ○ | **508** | 00045 | ○ | 506 - 510 | | | 558 | 608 | | | | |
| **525** | 00094 | ○ | **525** | 00046 | ○ | 523 - 527 | | | 575 | 625 | | | | |
| **532** | 00095 | ○ | **532** | 00047 | ○ | 530 - 534 | | | 582 | 635 | | | | |

● Standard ○ to order

**Order example: HRS - A - 168 - fv**

Type
Ø D [mm]
grade
or
Stock no.: **0311.010-00074**

## HCS - RAD

Pipe clamp assembly set
with DGM rubber insulation and RUV pipe rest

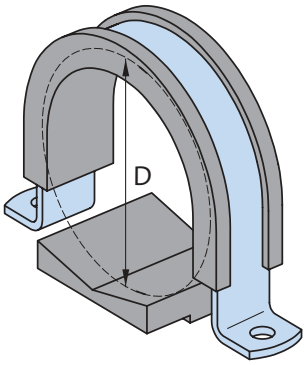


Note:
When DGM (Rubber insulation) is used, pipe rest RUK resp. RUV is also necessary.

Delivery includes:
1 x Pipe clamp Alpha
1 x Rubber insulation DGM (enclosed as cut goods)
1 x Pipe rest RUV

Assembly diagram

**HCS - RAD** (e.g. on HALFEN cantilever KON 52/2) consisting of:

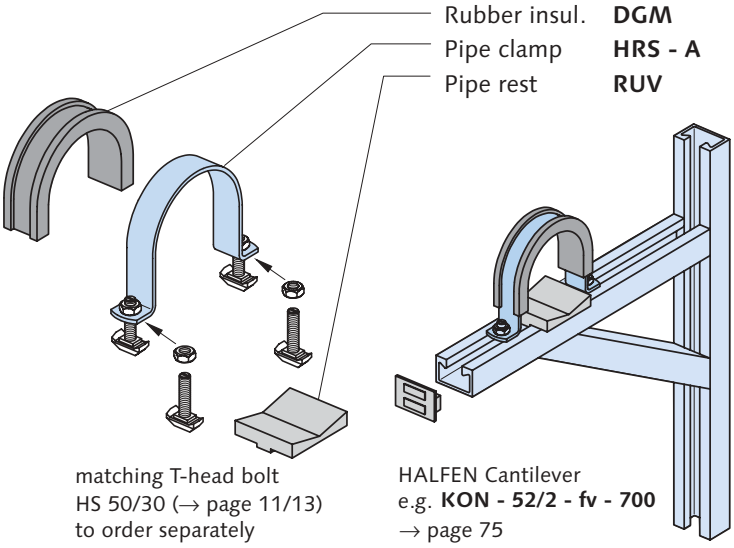


| Material fv h.d. galvanised Ø D ① [mm] | Stock no. 0303.010- | Material A4 Stainl. steel A4 Ø D ① [mm] | Stock no. 0303.010- | Span width from - to [mm] | DGM Rubber insulation length [mm] | Type |
|---|---|---|---|---|---|---|
| | | | | | | |
| | | | | | | |
| | | | | | | |
| **33,5** | 00042 ● | **33,5** | 00001 ● | 16,5 - 21,5 | 1 x 75 | DGM 25/8 |
| **42,5** | 00043 ● | **42,5** | 00002 ● | 25,5 - 30,5 | 1 x 75 | |
| **48,5** | 00044 ● | **48,5** | 00003 ● | 31,5 - 36,5 | 1 x 120 | |
| **50** | 00045 ● | **50** | 00004 ● | 33 - 38 | 1 x 120 | |
| **56** | 00046 ● | **56** | 00005 ● | 39 - 44 | 1 x 120 | |
| **60** | 00047 ● | **60** | 00006 ● | 43 - 48 | 1 x 150 | |
| **64** | 00048 ● | **64** | 00007 ● | 47 - 52 | 1 x 150 | |
| **77** | 00049 ● | **77** | 00008 ● | 60 - 65 | 1 x 180 | |
| **80** | 00050 ● | **80** | 00009 ● | 63 - 68 | 1 x 180 | |
| **84** | 00051 ● | **84** | 00010 ● | 67 - 72 | 1 x 180 | |
| **89** | 00052 ● | **89** | 00011 ● | 72 - 77 | 1 x 210 | |
| **96** | 00053 ● | **96** | 00012 ● | 79 - 84 | 1 x 210 | |
| **100** | 00054 ● | **100** | 00013 ● | 83 - 88 | 1 x 250 | DGM 30/8 |
| **105** | 00055 ● | **105** | 00014 ● | 88 - 93 | 1 x 250 | |
| **110** | 00056 ● | **110** | 00015 ● | 93 - 98 | 1 x 250 | |
| **116** | 00057 ● | **116** | 00016 ● | 99 - 104 | 1 x 250 | |
| **125** | 00058 ● | **125** | 00017 ● | 108 - 113 | 1 x 305 | |
| **131** | 00059 ● | **131** | 00018 ● | 114 - 119 | 1 x 305 | |
| **137** | 00060 ● | **137** | 00019 ● | 120 - 125 | 1 x 305 | |
| **141** | 00061 ● | **141** | 00020 ● | 124 - 129 | 1 x 305 | |
| **150** | 00062 ● | **150** | 00021 ● | 133 - 138 | 1 x 355 | |
| **157** | 00063 ● | **157** | 00022 ● | 140 - 145 | 1 x 355 | |
| **160** | 00064 ● | **160** | 00023 ● | 143 - 148 | 1 x 395 | DGM 40/8 |
| **168** | 00065 ● | **168** | 00024 ● | 151 - 156 | 1 x 395 | |
| **176** | 00066 ● | **176** | 00025 ● | 159 - 164 | 1 x 395 | |
| **185** | 00067 ● | **185** | 00026 ● | 168 - 173 | 1 x 450 | |
| **200** | 00068 ● | **200** | 00027 ● | 183 - 188 | 1 x 450 | |
| **212** | 00069 ● | **212** | 00028 ● | 195 - 200 | 1 x 500 | |
| **218** | 00070 ● | **218** | 00029 ● | 201 - 206 | 1 x 500 | |
| **225** | 00071 ● | **225** | 00030 ● | 208 - 213 | 1 x 560 | |
| **235** | 00072 ● | **235** | 00031 ● | 218 - 223 | 1 x 560 | |
| **267** | 00073 ○ | **267** | 00032 ○ | 250 - 255 | 1 x 650 | DGM 50/8 |
| **273** | 00074 ○ | **273** | 00033 ○ | 256 - 261 | 1 x 650 | |
| **285** | 00075 ● | **285** | 00034 ● | 268 - 273 | 1 x 700 | |
| **326** | 00076 ○ | **326** | 00035 ○ | 309 - 314 | 1 x 800 | |
| **340** | 00077 ○ | **340** | 00036 ○ | 323 - 328 | 1 x 800 | |
| **355** | 00078 ○ | **355** | 00037 ○ | 338 - 343 | 1 x 860 | DGM 50/8 |
| **400** | 00079 ○ | **400** | 00038 ○ | 383 - 388 | 1 x 1015 | |
| **406** | 00080 ○ | **406** | 00039 ○ | 389 - 394 | 1 x 1015 | |
| **420** | 00081 ○ | **420** | 00040 ○ | 403 - 408 | 1 x 1015 | |
| **429** | 00082 ○ | **429** | 00041 ○ | 412 - 417 | 1 x 1015 | |
| **508** | ○ | **508** | ○ | 491 - 496 | 1 x 1295 | |
| **525** | ○ | **525** | ○ | 508 - 513 | 1 x 1295 | |
| **532** | ○ | **532** | ○ | 515 - 520 | 1 x 1295 | |

● Standard ○ to order

① Ø D = Nominal dimension of pipe clamp without rubber insulation

For pipe clamps with insulation the effective diameter is
$D_{eff}$ = Ø D - 16 mm.

Pipe clamps are suitable for pipe-Ø within span width (see table value).

Order example:

Designation: **HCS - RAD - 326 - fv**

Typ
Ø D [mm]
Material
or
Stock no.: **0303.010-00076**

## HRS - B

Beta Pipe clamp

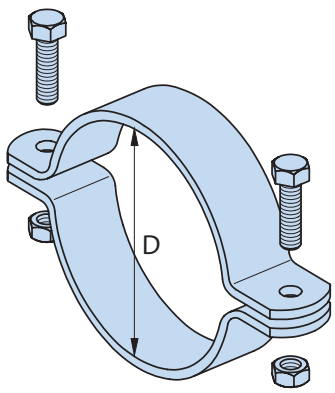


Delivery includes:
1 x Pipe clamp
2 x Hx. head bolts
2 x Nuts

**Note:**
**Pipe clamp HRS - B**
**with rubber insulation DGM:**
→ page 85

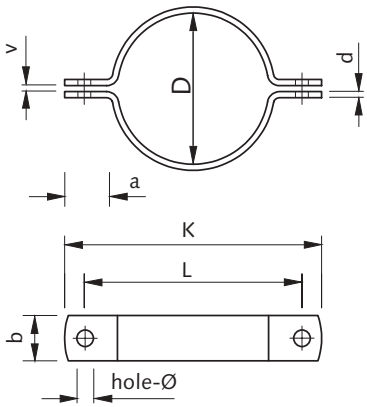


| Material fv h.d. galvanised Ø D [mm] | Stock no. 0311.030- | | Material A4 Stainless steel A4 Ø D [mm] | Stock no. 0311.030- | | Span width from - to [mm] | hole Ø [mm] | b/d [mm] | L [mm] | K [mm] | a [mm] | Pre-tension dim. v [mm] | load cap. [kN] |
|---|---|---|---|---|---|---|---|---|---|---|---|---|---|
| **21,5** | 00049 | ● | **21,5** | 00002 | ● | 20,5 - 23,5 | 6,5 for M 6 | 25/2,5 | 49,5 | 71,5 | 25 | 2,75 | 1,9 |
| **27** | 00050 | ● | **27** | 00003 | ● | 26 - 29 | | | 55 | 77 | | | |
| **33,5** | 00051 | ● | **33,5** | 00004 | ● | 32,5 - 35,5 | | | 61,5 | 83,5 | | | |
| **42,5** | 00052 | ● | **42,5** | 00005 | ● | 41,5 - 44,5 | | | 70,5 | 92,5 | | | |
| **48,5** | 00053 | ● | **48,5** | 00006 | ● | 47,5 - 50,5 | | | 76,5 | 98,5 | | | |
| **50** | 00054 | ● | **50** | 00007 | ● | 49 - 52 | | | 78 | 100 | | | |
| **56** | 00055 | ● | **56** | 00008 | ● | 55 - 58 | | | 84 | 106 | | | |
| **60** | 00056 | ● | **60** | 00009 | ● | 59 - 62 | 8,5 for M 8 | | 88 | 110 | | | |
| **64** | 00057 | ● | **64** | 00010 | ● | 63 - 66 | | | 92 | 114 | | | |
| **77** | 00058 | ● | **77** | 00011 | ● | 76 - 79 | | | 105 | 127 | | | |
| **80** | 00059 | ● | **80** | 00012 | ● | 79 - 82 | | | 108 | 130 | | | |
| **84** | 00060 | ● | **84** | 00013 | ○ | 83 - 86 | | | 112 | 134 | | | |
| **89** | 00061 | ● | **89** | 00014 | ● | 88 - 91 | | | 118 | 140 | | | |
| **96** | 00062 | ● | **96** | 00015 | ○ | 95 - 98 | | | 125 | 147 | | | |
| **100** | 00063 | ● | **100** | 00016 | ● | 98 - 102 | 11 for M 10 | 30/4 | 144 | 170 | 35 | 4 | 4,1 |
| **105** | 00064 | ● | **105** | 00017 | ● | 103 - 107 | | | 149 | 175 | | | |
| **110** | 00065 | ● | **110** | 00018 | ● | 108 - 112 | | | 154 | 180 | | | |
| **116** | 00066 | ● | **116** | 00019 | ● | 114 - 118 | | | 160 | 186 | | | |
| **125** | 00067 | ● | **125** | 00020 | ● | 123 - 127 | | | 169 | 195 | | | |
| **131** | 00068 | ● | **131** | 00021 | ● | 129 - 133 | | | 175 | 201 | | | |
| **137** | 00069 | ● | **137** | 00022 | ● | 135 - 139 | | | 181 | 207 | | | |
| **141** | 00070 | ● | **141** | 00023 | ● | 139 - 143 | | | 185 | 211 | | | |
| **150** | 00071 | ● | **150** | 00024 | ● | 148 - 152 | | | 194 | 220 | | | |
| **157** | 00072 | ● | **157** | 00025 | ● | 155 - 159 | | | 201 | 227 | | | |
| **160** | 00073 | ● | **160** | 00026 | ● | 158 - 162 | 13 for M 12 | 40/4 | 208 | 240 | 40 | 4 | 4,9 |
| **168** | 00074 | ● | **168** | 00027 | ● | 166 - 170 | | | 216 | 248 | | | |
| **176** | 00075 | ● | **176** | 00028 | ● | 174 - 178 | | | 224 | 256 | | | |
| **185** | 00076 | ● | **185** | 00029 | ● | 183 - 187 | | | 233 | 265 | | | |
| **200** | 00077 | ● | **200** | 00030 | ● | 198 - 202 | | | 248 | 280 | | | |
| **212** | 00078 | ● | **212** | 00031 | ● | 210 - 214 | | | 260 | 292 | | | |
| **218** | 00079 | ● | **218** | 00032 | ● | 216 - 220 | | | 266 | 298 | | | |
| **225** | 00080 | ● | **225** | 00033 | ● | 223 - 227 | | | 273 | 305 | | | |
| **235** | 00081 | ○ | **235** | 00034 | ○ | 233 - 237 | | | 283 | 315 | | | |
| **267** | 00082 | ○ | **267** | 00035 | ○ | 265 - 269 | 17 for M 16 | 50/5 | 317 | 367 | 50 | 5 | 7,8 |
| **273** | 00083 | ○ | **273** | 00036 | ○ | 271 - 275 | | | 323 | 373 | | | |
| **285** | 00084 | ○ | **285** | 00037 | ○ | 283 - 287 | | | 335 | 385 | | | |
| **326** | 00085 | ○ | **326** | 00038 | ○ | 324 - 328 | | | 376 | 426 | | | |
| **340** | 00086 | ○ | **340** | 00039 | ○ | 338 - 342 | | | 390 | 440 | | | |
| **355** | 00087 | ○ | **355** | 00040 | ○ | 353 - 357 | 17 for M 16 | 60/6 | 415 | 465 | 55 | 5 | 9,7 |
| **400** | 00088 | ○ | **400** | 00041 | ○ | 398 - 402 | | | 460 | 510 | | | |
| **406** | 00089 | ○ | **406** | 00042 | ○ | 404 - 408 | | | 466 | 516 | | | |
| **420** | 00090 | ○ | **420** | 00043 | ○ | 418 - 422 | | | 480 | 530 | | | |
| **429** | 00091 | ○ | **429** | 00044 | ○ | 427 - 431 | | | 489 | 539 | | | |
| **508** | 00092 | ○ | **508** | 00045 | ○ | 506 - 510 | | | 568 | 618 | | | |
| **525** | 00093 | ○ | **525** | 00046 | ○ | 523 - 527 | | | 585 | 635 | | | |
| **532** | 00094 | ○ | **532** | 00047 | ○ | 530 - 534 | | | 592 | 642 | | | |

● Standard ○ to order

**Order example: HRS - B - 125 - fv**

Type
Ø D [mm]
Material
or
Stock no.: **0311.030-00067**

## HRS - D

Delta Pipe clamp

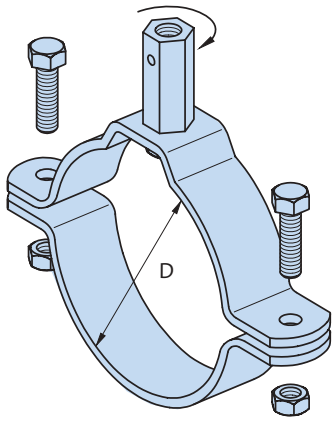


Delivery includes:
1 x Pipe clamp with hexagonal rod coupler, unremovable but turnable on pipe clamp
2 x Hex. head bolts
2 x Nuts

**Note:**
**Pipe clamp HRS-D with rubber insulation DGM:** → page 85

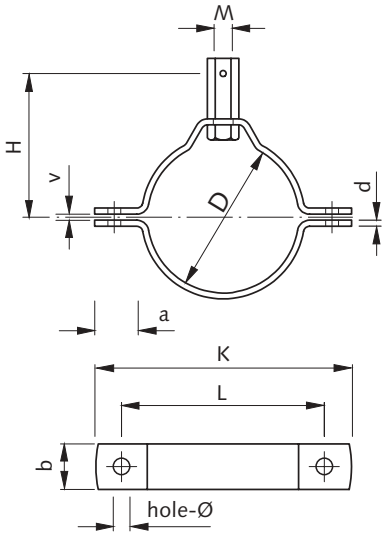


| Material fv h.d. galvanised Ø D [mm] | Stock no. 0311.050- | Material A4 Stainl. steel A4 Ø D [mm] | Stock no. 0311.050- | span width from - to [mm] | hole Ø [mm] | b/d [mm] | L [mm] | K [mm] | a [mm] | H [mm] | M [mm] | Pre-tension dim. v [mm] | load cap. [kN] |
|---|---|---|---|---|---|---|---|---|---|---|---|---|---|
| **64** | 00030 ● | **64** | 00001 ● | 63 - 66 | 8,5 for M 8 | 25/2,5 | 92 | 114 | 25 | 65 | M 10 x 40 w. v.h. | 2,75 | 1,9 |
| **77** | 00031 ● | **77** | 00002 ● | 76 - 79 | | | 105 | 127 | | 70 | | | |
| **80** | 00032 ● | **80** | 00003 ● | 79 - 82 | | | 108 | 130 | | 70 | | | |
| **89** | 00033 ● | **89** | 00004 ● | 88 - 91 | | | 118 | 140 | | 75 | | | |
| **96** | 00034 ● | **96** | 00005 ● | 95 - 98 | | | 125 | 147 | | 80 | | | |
| **100** | 00035 ● | **100** | 00006 ● | 98 - 102 | 11 for M 10 | 30/4 | 144 | 170 | 35 | 85 | M 12 x 40 with view hole | 4 | 4,1 |
| **105** | 00036 ● | **105** | 00007 ● | 103 - 107 | | | 149 | 175 | | 90 | | | |
| **110** | 00037 ● | **110** | 00008 ● | 108 - 112 | | | 154 | 180 | | 90 | | | |
| **116** | 00038 ● | **116** | 00009 ● | 114 - 118 | | | 160 | 186 | | 95 | | | |
| **125** | 00039 ● | **125** | 00010 ● | 123 - 127 | | | 169 | 195 | | 100 | | | |
| **131** | 00040 ● | **131** | 00011 ● | 129 - 133 | | | 175 | 201 | | 100 | | | |
| **137** | 00041 ● | **137** | 00012 ● | 135 - 139 | | | 181 | 207 | | 105 | | | |
| **141** | 00042 ● | **141** | 00013 ● | 139 - 143 | | | 185 | 211 | | 105 | | | |
| **150** | 00043 ● | **150** | 00014 ● | 148 - 152 | | | 194 | 220 | | 110 | | | |
| **157** | 00044 ● | **157** | 00015 ● | 155 - 159 | | | 201 | 227 | | 115 | | | |
| **160** | 00045 ● | **160** | 00016 ● | 158 - 162 | 13 for M 12 | 40/4 | 208 | 240 | 40 | 125 | M 16 x 50 with view hole | 4 | 4,9 |
| **168** | 00046 ● | **168** | 00017 ● | 166 - 170 | | | 216 | 248 | | 130 | | | |
| **176** | 00047 ● | **176** | 00018 ● | 174 - 178 | | | 224 | 256 | | 135 | | | |
| **185** | 00048 ● | **185** | 00019 ● | 183 - 187 | | | 233 | 265 | | 140 | | | |
| **200** | 00049 ● | **200** | 00020 ● | 198 - 202 | | | 248 | 280 | | 145 | | | |
| **212** | 00050 ● | **212** | 00021 ● | 210 - 214 | | | 260 | 292 | | 150 | | | |
| **218** | 00051 ● | **218** | 00022 ● | 216 - 220 | | | 266 | 298 | | 155 | | | |
| **225** | 00052 ● | **225** | 00023 ● | 223 - 227 | | | 273 | 305 | | 160 | | | |
| **235** | 00053 ○ | **235** | 00024 ○ | 233 - 237 | | | 283 | 315 | | 170 | | | |
| **267** | 00054 ○ | **267** | 00025 ○ | 265 - 269 | 17 for M 16 | 50/5 | 317 | 367 | 50 | 175 | M 16 x 50 w. v.h. | 5 | 7,8 |
| **273** | 00055 ○ | **273** | 00026 ○ | 271 - 275 | | | 323 | 373 | | 180 | | | |
| **285** | 00056 ○ | **285** | 00027 ○ | 283 - 287 | | | 335 | 385 | | 190 | | | |
| **326** | 00057 ○ | **326** | 00028 ○ | 324 - 328 | | | 376 | 426 | | 210 | | | |
| **340** | 00058 ○ | **340** | 00029 ○ | 338 - 342 | | | 390 | 440 | | 215 | | | |

● Standard ○ to order

Assembly diagram
Pipe clamp Delta

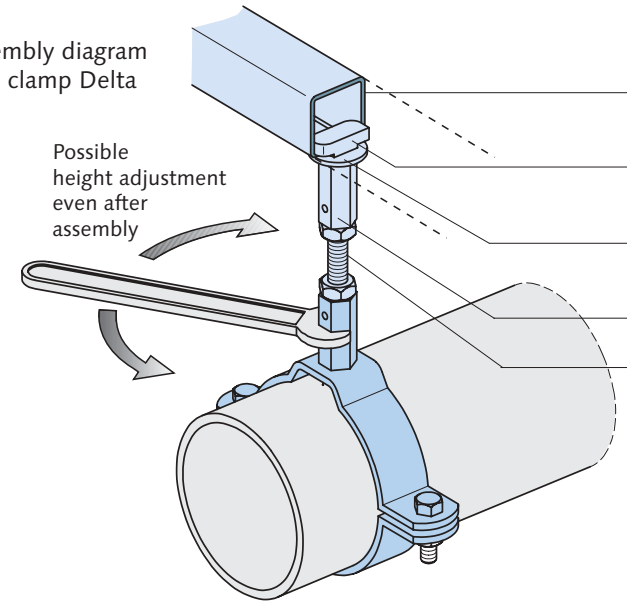


e.g.

HALFEN Channel HM 36/36 → page 34

T-head bolt HS 38/17 → page 35

U - Washer US ..., DIN 9021 → page 44

Hexagonal rod coupler

Threaded rod GWS with 2 lock nuts

**Order example:** **HRS - D - 125 - fv**

Type
Ø D [mm]
Material
or
Stock no.: **0311.050-00039**

## HRS - G

Gamma Pipe clamps

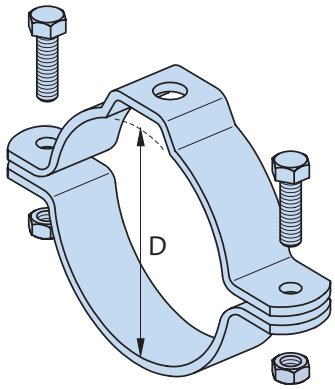


Delivery includes:
1 x Pipe clamp
2 x Hex. head bolts
2 x Nuts

**Note:**
**Pipe clamp HRS-G with rubber insulation DGM:** → page 85

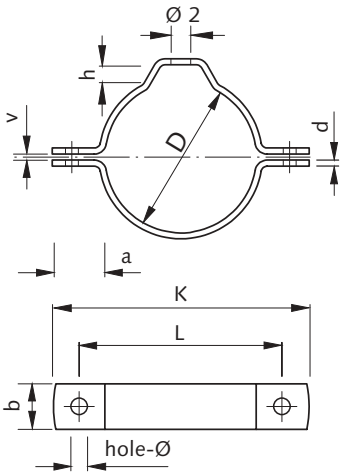


| Material fv h.d. galvanised Ø D [mm] | Stock no. 0311.060- | Material A4 Stainl. steel A4 Ø D [mm] | Stock no. 0311.060- | span width from - to [mm] | hole Ø [mm] | b/d [mm] | L [mm] | K [mm] | a [mm] | h [mm] | Ø 2 [mm] | Pre-tension dim. v [mm] | load cap. [kN] |
|---|---|---|---|---|---|---|---|---|---|---|---|---|---|
| **64** | 00030 ● | **64** | 00001 ● | 63 - 66 | 8,5 for M 8 | 25/2,5 | 92 | 114 | 25 | 9 | 11 | 2,75 | 1,9 |
| **77** | 00031 ● | **77** | 00002 ● | 76 - 79 | | | 105 | 127 | | | | | |
| **80** | 00032 ● | **80** | 00003 ● | 79 - 82 | | | 108 | 130 | | | | | |
| **89** | 00033 ● | **89** | 00004 ● | 88 - 91 | | | 118 | 140 | | | | | |
| **96** | 00034 ● | **96** | 00005 ● | 95 - 98 | | | 125 | 147 | | | | | |
| **100** | 00035 ● | **100** | 00006 ● | 98 - 102 | 11 for M 10 | 30/4 | 144 | 170 | 35 | 11 | 13 | 4 | 4,1 |
| **105** | 00036 ● | **105** | 00007 ● | 103 - 107 | | | 149 | 175 | | | | | |
| **110** | 00037 ● | **110** | 00008 ● | 108 - 112 | | | 154 | 180 | | | | | |
| **116** | 00038 ● | **116** | 00009 ● | 114 - 118 | | | 160 | 186 | | | | | |
| **125** | 00039 ● | **125** | 00010 ● | 123 - 127 | | | 169 | 195 | | | | | |
| **131** | 00040 ● | **131** | 00011 ● | 129 - 133 | | | 175 | 201 | | | | | |
| **137** | 00041 ● | **137** | 00012 ● | 135 - 139 | | | 181 | 207 | | | | | |
| **141** | 00042 ● | **141** | 00013 ● | 139 - 143 | | | 185 | 211 | | | | | |
| **150** | 00043 ● | **150** | 00014 ● | 148 - 152 | | | 194 | 220 | | | | | |
| **157** | 00044 ● | **157** | 00015 ● | 155 - 159 | | | 201 | 227 | | | | | |
| **160** | 00045 ● | **160** | 00016 ● | 158 - 162 | 13 for M 12 | 40/4 | 208 | 240 | 40 | 14 | 17 | 4 | 4,9 |
| **168** | 00046 ● | **168** | 00017 ● | 166 - 170 | | | 216 | 248 | | | | | |
| **176** | 00047 ● | **176** | 00018 ● | 174 - 178 | | | 224 | 256 | | | | | |
| **185** | 00048 ● | **185** | 00019 ● | 183 - 187 | | | 233 | 265 | | | | | |
| **200** | 00049 ● | **200** | 00020 ● | 198 - 202 | | | 248 | 280 | | | | | |
| **212** | 00050 ● | **212** | 00021 ● | 210 - 214 | | | 260 | 292 | | | | | |
| **218** | 00051 ● | **218** | 00022 ● | 216 - 220 | | | 266 | 298 | | | | | |
| **225** | 00052 ● | **225** | 00023 ● | 223 - 227 | | | 273 | 305 | | | | | |
| **235** | 00053 ○ | **235** | 00024 ○ | 233 - 237 | | | 283 | 315 | | | | | |
| **267** | 00054 ○ | **267** | 00025 ○ | 265 - 269 | 17 for M 16 | 50/5 | 317 | 367 | 50 | 18 | 17 | 5 | 7,8 |
| **273** | 00055 ○ | **273** | 00026 ○ | 271 - 275 | | | 323 | 373 | | | | | |
| **285** | 00056 ○ | **285** | 00027 ○ | 283 - 287 | | | 335 | 385 | | | | | |
| **326** | 00057 ○ | **326** | 00028 ○ | 324 - 328 | | | 376 | 426 | | | | | |
| **340** | 00058 ○ | **340** | 00029 ○ | 338 - 342 | | | 390 | 440 | | | | | |

● Standard ○ to order

**Order example:** **HRS - G - 125 - fv**

Type
Ø D [mm]
Material
or
Stock no.: **0311.060-00039**

HALFEN Pipe clamps HRS with rubber insulation **DGM**
(DGM see below, order separately)

Assembly diagram
Pipe clamp Beta
**HRS - B** (→ page 82)
with DGM
(order separately)

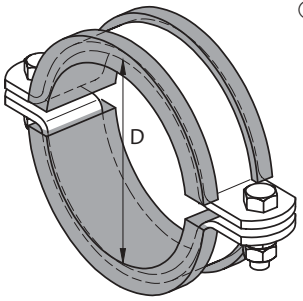


① Ø D = Nominal dimension of pipe clamp without rubber insulation

For pipe clamps with insulation the effective diameter is $D_{eff}$ = Ø D - 16 mm; span width with insulation see table values.

Assembly diagram
Pipe clamp Gamma
**HRS - G** (→ page 84)
with DGM
(order separately)

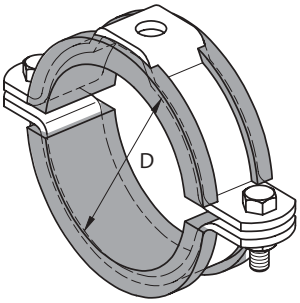


Assembly diagram
Pipe clamp Delta
**HRS - D** (→ page 83)
with DGM
(order separately)

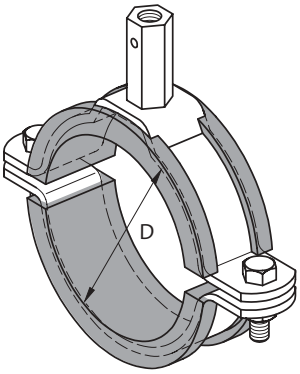


Pipe clamp Alpha **HRS - A** with DGM: → page 81

| Ø D ① [mm] | Span width **with** DGM from - to [mm] | Rubber insulation DGM (order separately) Length [mm] | Type |
|---|---|---|---|
| **21,5** | | – | **DGM 25/8** |
| **27** | | | |
| **33,5** | 16,5 - 21,5 | 2 x 50 | |
| **42,5** | 25,5 - 30,5 | | |
| **48,5** | 31,5 - 36,5 | 2 x 70 | |
| **50** | 33 - 38 | | |
| **56** | 39 - 44 | | |
| **60** | 43 - 48 | 2 x 85 | |
| **64** | 47 - 52 | | |
| **77** | 60 - 65 | 2 x 110 | |
| **80** | 63 - 68 | | |
| **84** | 67 - 72 | 2 x 130 | |
| **89** | 72 - 77 | | |
| **96** | 79 - 84 | | |
| **100** | 83 - 88 | 2 x 155 | **DGM 30/8** |
| **105** | 88 - 93 | | |
| **110** | 93 - 98 | | |
| **116** | 99 - 104 | | |
| **125** | 108 - 113 | 2 x 175 | |
| **131** | 114 - 119 | | |
| **137** | 120 - 125 | 2 x 190 | |
| **141** | 124 - 129 | | |
| **150** | 133 - 138 | 2 x 220 | |
| **157** | 140 - 145 | | |
| **160** | 143 - 148 | 2 x 240 | **DGM 40/8** |
| **168** | 151 - 156 | | |
| **176** | 159 - 164 | 2 x 270 | |
| **185** | 168 - 173 | | |
| **200** | 183 - 188 | 2 x 295 | |
| **212** | 195 - 200 | 2 x 310 | |
| **218** | 201 - 206 | | |
| **225** | 208 - 213 | 2 x 345 | |
| **235** | 218 - 223 | | |
| **267** | 250 - 255 | 2 x 405 | **DGM 50/8** |
| **273** | 256 - 261 | | |
| **285** | 268 - 273 | 2 x 435 | |
| **326** | 309 - 314 | 2 x 490 | |
| **340** | 323 - 328 | 2 x 530 | |
| **355** | 338 - 343 | 2 x 530 | **DGM 60/8** |
| **400** | 383 - 388 | 2 x 625 | |
| **406** | 389 - 394 | | |
| **420** | 403 - 408 | | |
| **429** | 412 - 417 | | |
| **508** | 491 - 496 | 2 x 790 | |
| **525** | 508 - 513 | | |
| **532** | 515 - 520 | | |

**DGM** ●
Rubber insulation DGM (cut goods)
for HALFEN Pipe clamps
Material:
EPDM, resistant to temp.
from - 40°C to +110° C

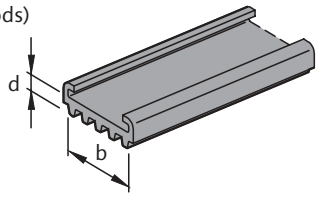


● Standard ○ to order

② Please indicate length [m] when ordering.

Order example:
**DGM 40/ 8, 12 m**
or Stock no.
**0320.000-00003, 12m**

| b/d [mm] | Stock no. ② 0320.000- | for pipe clamp - Ø D HRS - A [mm] | HRS - B - G - D [mm] |
|---|---|---|---|
| **DGM 25/ 8** | 00001 | 17 - 96 | 17 - 96 |
| **DGM 30/ 8** | 00002 | 100 - 157 | 100 - 157 |
| **DGM 40/ 8** | 00003 | 160 - 235 | 160 - 235 |
| **DGM 50/ 8** | 00004 | 267 - 532 | 267 - 340 |
| **DGM 60/ 8** | 00005 | | 355 - 532 |