Plain Sockets and Crimped Sockets

Plain Sockets and Crimped Sockets are economic and have advantages in thin components, where the long tail provides excellent anchorage. The reinforcement tail is essential and must be installed as shown in the yard by the precaster.

Plain Sockets are available in mild steel BZP and stainless steel both with Rd threads. Crimped Sockets are only available in mild steel BZP and with metric threads. The sockets are specially made for lifting are not to be confused with fixing sockets.

For thin units that have to be turned through 180° from mould to final position, plain sockets can be made double threaded to pass right through the unit.

Safe working loads shown are after the application of a safety factor on test of 2 for 15 N/mm² concrete and 3 for steel.

Actual working load must be calculated as shown on pages 6 and 7.

Size, availability and anchorage reinforcement

Plain Sockets – Code **PA**

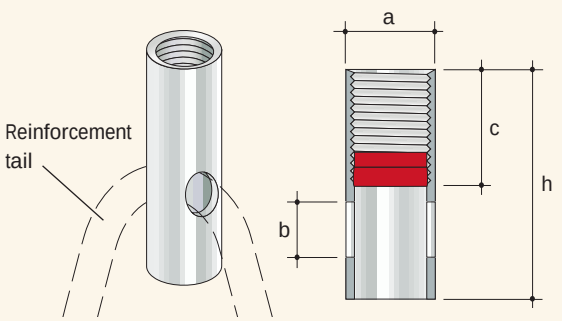

Crimped Sockets – Code **PB**

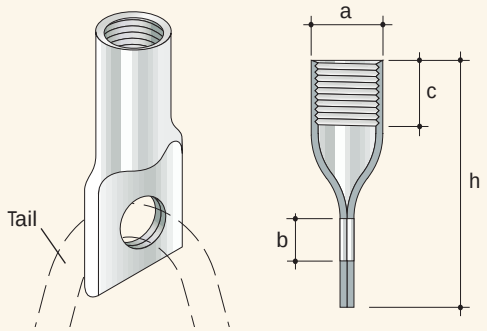

Size	Order code Mild steel – BZP / Stainless steel	Dimensions a mm	b mm	c mm	h mm	Size	Order code Mild steel – BZP	Dimensions a mm	b mm	c mm	h mm	SWL in 15N/mm² concrete kg
Rd12	**PA2 12042** **PA8 12042**	15.0	8.0	22	40	M12	**PB2 12055**	16.5	10.0	20	55	500
Rd16	**PA2 16054** **PA8 16054**	21.0	13.0	27	54	M16	**PB2 16076**	22.0	13.0	20	76	1200
Rd20	**PA2 20069** **PA8 20069**	27.0	15.5	35	69	M20	**PB2 20090**	27.0	15.0	25	90	2000
Rd24	**PA2 24078** **PA8 24078**	31.0	18.0	43	78	M24	**PB2 24105**	31.0	17.0	30	105	2500
Rd30	**PA2 30103** **PA8 30103**	39.5	22.5	56	103	M30	**PB2 30135**	41.0	19.0	35	135	4000
Rd36	**PA2 36125** **PA8 36125**	47.0	27.5	68	125	–	–	–	–	–		6300
Rd42	**PA2 42145** **PA8 42145**	54.0	32.0	80	145	–	–	–	–	–		8000
Rd52	**PA2 52195** **PA8 52195**	70.0	40.0	100	195	–	–	–	–	–		12,500

Spacing of sockets and edge distances

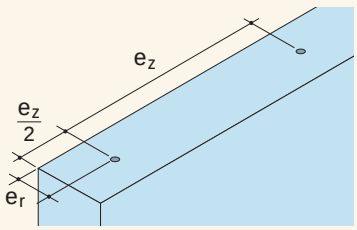

Typical thick panel or beam

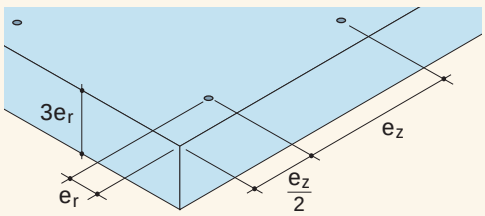

Typical slab or culvert

Note: The dimensions assume cage or fabric reinforcement as shown at the top of page 9
For help with setting out, use the Halfen Autocad disc.

Size	min e_r (mm)	min e_z (mm)
Rd12 / M12	37	300
Rd16 / M16	40	400
Rd20 / M20	50	550
Rd24 / M24	60	600
Rd30 / M30	70	650
Rd36	100	800
Rd42	120	1000
Rd52	138	1200

Plain Sockets and Crimped Sockets

The details on these pages show panels, but it could equally apply to other components. The loads shown assume the angle of lift, i.e. $\beta \leq 30°$ and normal reinforcement such as a cage or two layers of mesh. For a single layer of mesh please consult Halfen Ltd. Turning/pitching panels reduces the allowable load as shown below.

Typical panels

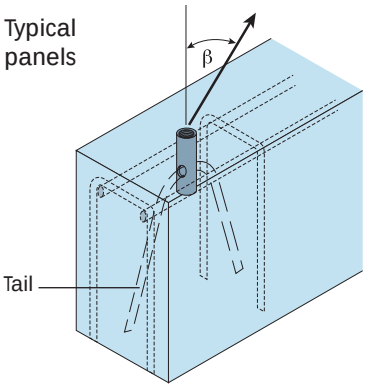

$\beta \leq 12.5°$ Reinforcement cage
Typically T12 bars full length
T8 stirrups at 150 mm centres

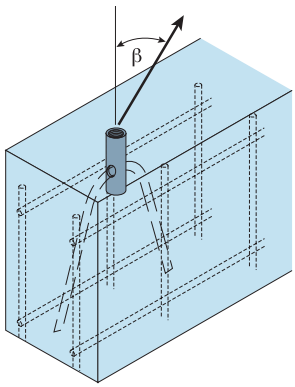

$\beta \leq 12.5°$ Two layers of mesh
Typically 8 mm wire, example
A252 and B503

Typical slab

Fabric/mat reinforcement is essential.

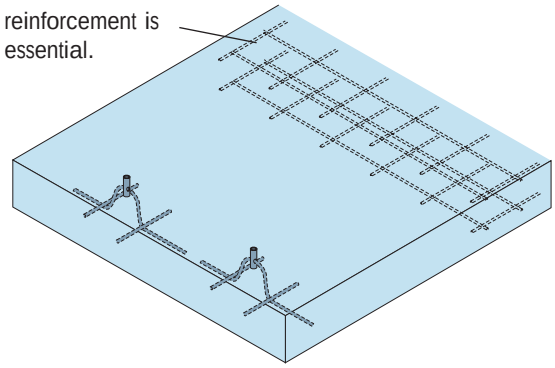

Reinforcement tails should normally be U bars, however, in slabs the anchorage reinforcement may be cranked as shown. A completely straight bar should be avoided. Bars must be laid over the cranked bars as shown

d mm	D mm	L mm	Unbent length mm
6	26	240	500
10	40	330	700
12	48	440	925
12	48	480	1000
16	64	650	1350
20	140	820	1700
25	175	860	1825
25	196	1200	2500

Anchorage reinforcement

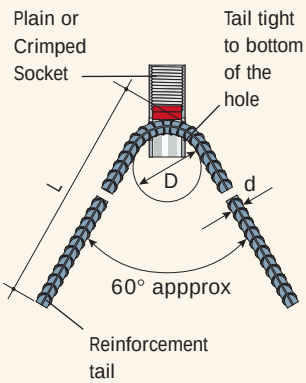

Minimum e_r assumes cover to the reinforcement is acceptable to the designer: stainless steel reinforcement may be needed if cover is limited.

Special minimum e_r may be agreed with Halfen Ltd on a job basis.

For recess former for Swivel Lifting Eye, see page 17.

For recess former for increased cover, see pages 15 & 17.

Lifting on site is usually the worst case due to higher crane factors and worse angle of lift (β) – see calculation page 7.

For panels with a single layer of fabric, ie for vertical lift and no pitching, please consult Halfen Ltd.

Lateral reinforcement for β > 12.5° < 45°

Where the lifting angle, is between 12.5° and 45°, additional reinforcement is required as shown below.

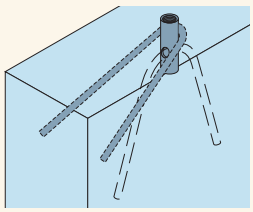

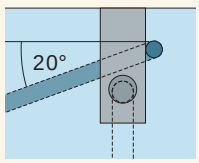

Detail shows position of reinforcement

insert dia.	reinforcement dia.	unbent length	
12	6	400*	Allowable load as main table shown opposite
16	8	650*	
20	8	900*	
24	12	950*	
30	12	1200*	
36	16	1500*	
42	16	1700*	
52	20	2100*	

* $e_{z/2}$ may increase slightly to accommodate these bars.

Turning/pitching reinforcement for slabs

Additional reinforcement is required where sockets are inserted in the edge for turning/pitching. See page 12 for details. Note that even with the additional reinforcement, the SWL is 50% of that shown in the table opposite.