Recess formers for Threaded lifting inserts
(for eventual use with Threaded lifting loops)

Introduction

Threaded inserts must be carefully fixed to formwork, ie, correctly located and held firmly. Halfen offer a range of fixing methods.

Any of the fixing methods shown below is suitable for use with the Threaded Lifting loop, but plastic nailing plates are the most economic and hence the most commonly used.

For improved corrosion protection of the socket after use, ie deeper recess, please use the small deep nailing plate, Code PXD.

Size and availability

Plastic nailing plate
Code **PXNP**

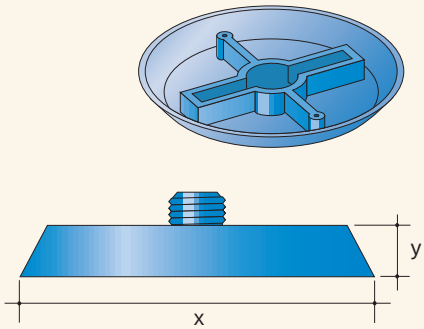

Most suitable choice if a minimal recess/cover is acceptable.

This plastic nailing plate is suitable for both metric and Rd threads.

The recess gives minimal cover, ie, it may not be deep enough to resist corrosion.

Nail to formwork and screw on socket.

After stripping, unscrew. Not normally reusable.

Small deep nailing plate
Code **PXD**

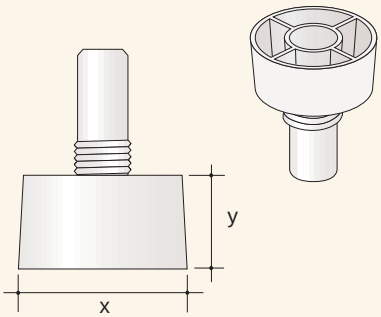

A plastic insert for use where greater cover to the socket is required. The recess gives 15mm cover.

The small diameter means that any subsequent filler is less conspicuous.

It is suitable for both metric and Rd threads.

Nail to formwork and screw on socket.

After stripping, unscrew. Not normally reusable.

Removing tool PXDNPK is available if required.

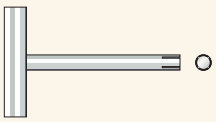

Magnetic nailing plate
Code **PXMNP**

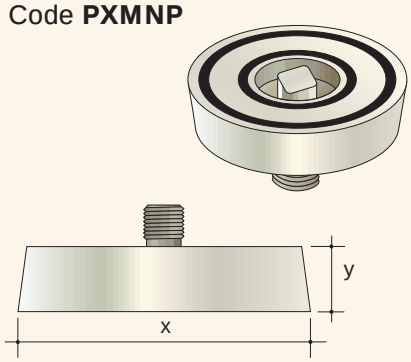

A magnetic nailing plate for use on steel formwork.

It is suitable for both metric and Rd threads.

The recess gives 15mm cover.

Place on steel formwork and screw on socket.

Reusable – after stripping, unscrew, clean and store on a keep plate.

Removing tool PXMNPK is available if required.

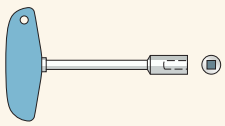

Size	Order code	Width x (mm)	Depth y (mm)	Size	Order code	Width x (mm)	Depth y (mm)	Size	Order code	Width x (mm)	Depth y (mm)
Rd/M12	**PXNP12**	58	10	Rd/M12	**PXDNP12**	27	15	Rd/M12	**PXMP12**	68	15
Rd/M16	**PXNP16**	58	10	Rd/M16	**PXDNP16**	27	15	Rd/M16	**PXMP16**	68	15
Rd/M20	**PXNP20**	58	10	Rd/M20	**PXDNP20**	27	15	Rd/M20	**PXMP20**	68	15
Rd/M24	**PXNP24**	58	10	Rd/M24	**PXDNP24**	27	15	Rd/M24	**PXMP24**	68	15
Rd/M30	**PXNP30**	60	8	–	–	–	–	Rd/M30	**PXMP30**	68	15
Rd/M36	**PXNP36**	106	12	–	–	–	–	Rd/M36	**PXMP36**	68	15
Rd/M42	**PXNP42**	115	15	–	–	–	–	–	–	–	–
Rd/M52	**PXNP52**	135	15	–	–	–	–	–	–	–	–

Recess formers for Threaded lifting inserts
(for eventual use with Swivel lifting eyes)

Introduction

Threaded inserts must be carefully fixed to formwork, ie, correctly located and held firmly. Halfen offer a range of fixing methods.

It is essential that the correct size recess former is used so that the Swivel Lifting Eye fits accurately into the recess.

Size and availability

Steel nailing recess former Code **PW2NP**

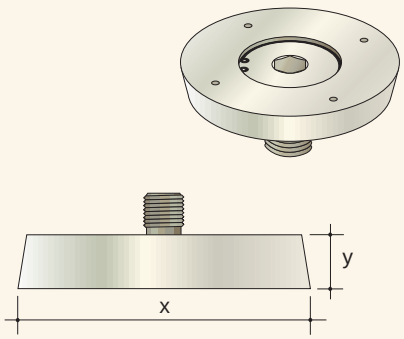

A steel nailing plate/recess former suitable for both metric and Rd threads.

Recess y gives minimal cover.

Nail to formwork and screw on socket.

After stripping, unscrew, clean and re-use.

Steel magnetic recess former Code **PWMNP**

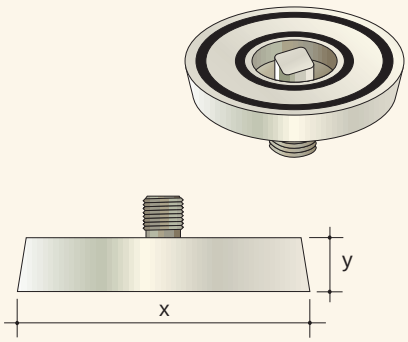

This is a magnetic nailing plate for use on steel formwork.

It is suitable for both metric and Rd threads.

Place on steel formwork and screw on socket.

After stripping, unscrew, clean and re-use.

Removing tool PXMNPK is available if required.

Size	Order code	Width x (mm)	Depth y (mm)
Rd/M12	**PW2NP12**	51	10
Rd/M16	**PW2NP16**	60	10
Rd/M20	**PW2NP20**	74	10
Rd/M24	**PW2NP24**	78	12
Rd/M30	**PW2NP30**	95	12
Rd/M36	**PW2NP36**	105	12
Rd/M42	**PW2NP42**	115	15
Rd/M52	**PW2NP52**	135	15

Size	Order code	Width x (mm)	Depth y (mm)
Rd/M12	**PWMNP12**	51	10
Rd/M16	**PWMNP16**	60	10
Rd/M20	**PWMNP20**	74	10
Rd/M24	**PWMNP24**	78	12
Rd/M30	**PWMNP30**	95	12
Rd/M36	**PWMNP36**	105	12
Rd/M42	**PWMNP42**	115	15
Rd/M52	**PWMNP52**	136	15

Plastic sealing caps – Code **PR**

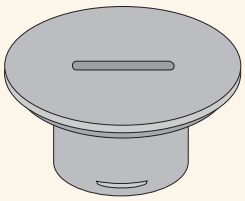

Available in sizes Rd12 to Rd52. They have a 'quick thread' and can be installed in all types of threaded inserts using the screw driver slot in the head. Normally for temporary use during the building process.