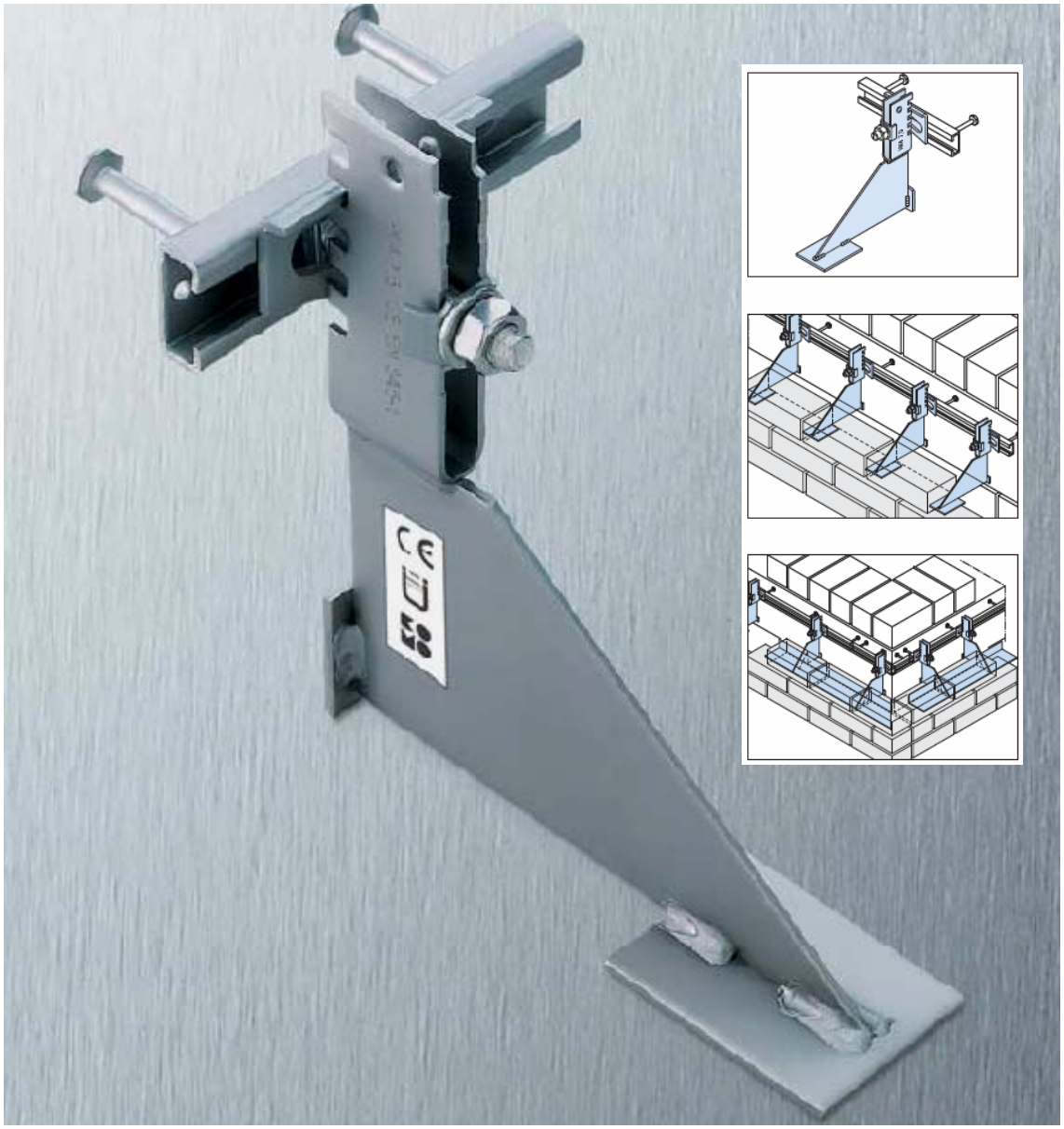

The individual support bracket HK4-U is a single support bracket with a continuous gusset and support plate.

This adjustable HK4-U support bracket connects to the HALFEN HTA cast-in channels and offers an easy-to-fit, economic and safe construction.

Vertical adjustment: is achieved by using a combination of a wedge adjuster and a series of notches in the 'U' shaped pressing allowing +/- 34mm.

The HK4 brickwork support system is available in stainless steel in various versions to cope with a wide range of support applications.

The different load capacities of 3.5kN, 7.0kN and 10.5kN in connection with HALFEN channels are an economic way of supporting brickwork.

The HK4 bracket is designed to save time and reduce the number of men on site required install the support system.

The HK4 brackets are made from high quality stainless steel which is thin enough to avoid the need for rebated brickwork without impacting on the overall performance